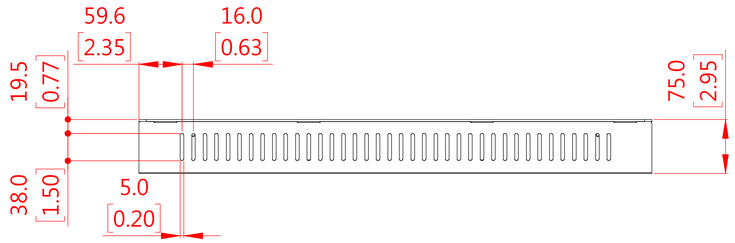

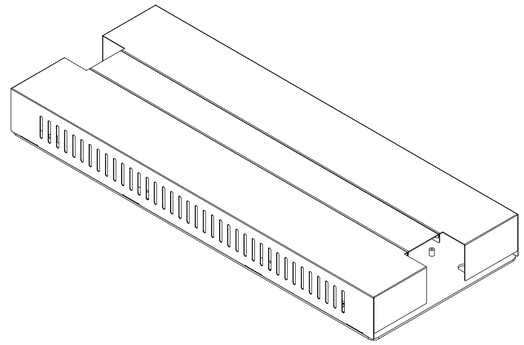

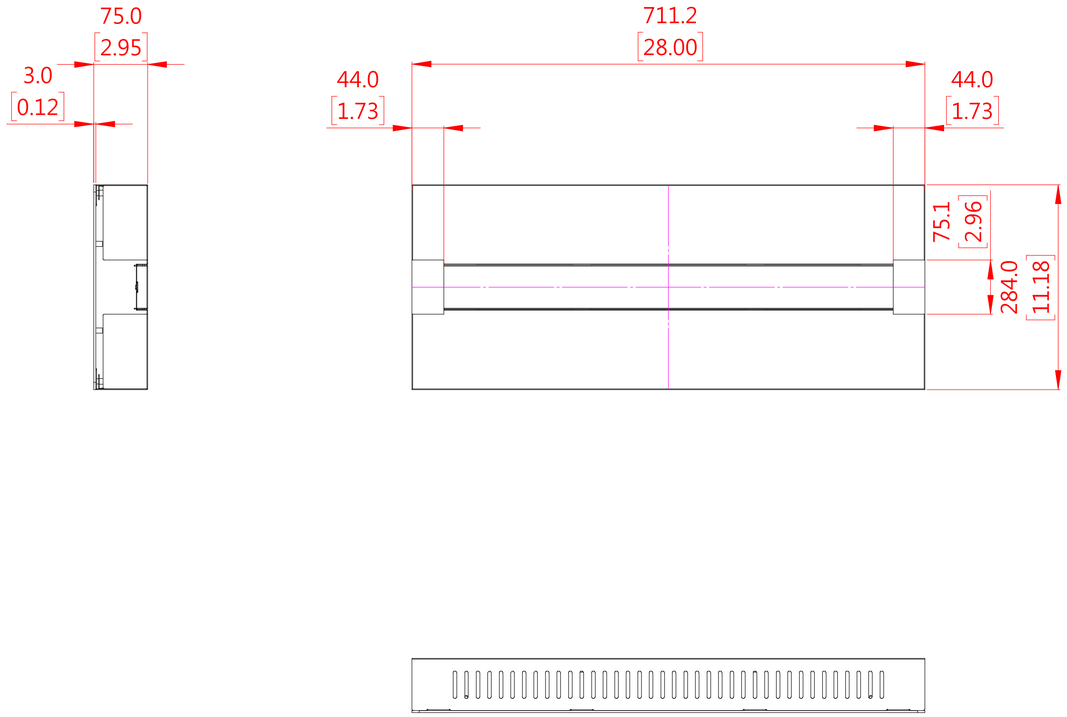

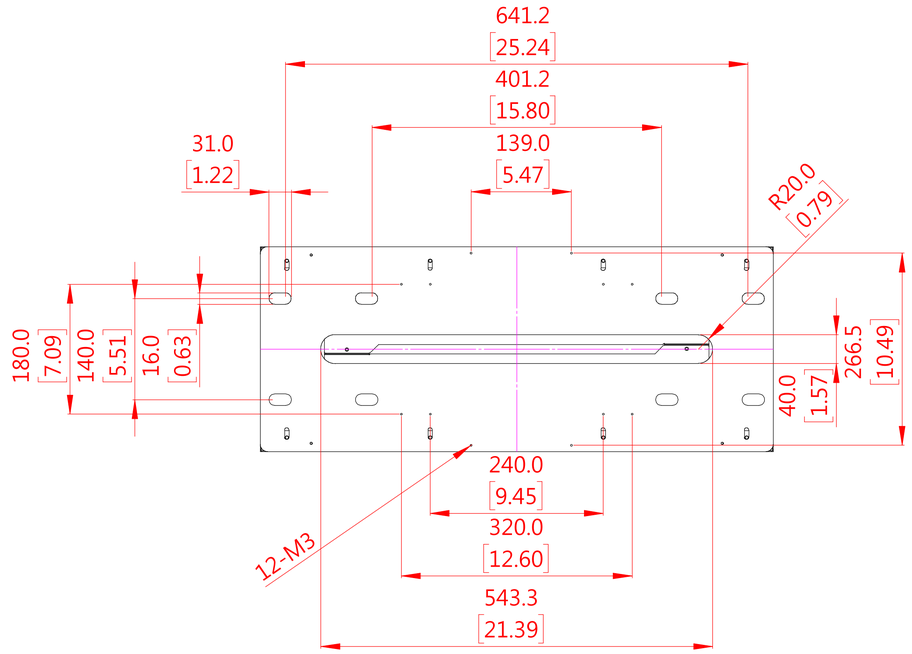

Unit	UNLESS OTHERWISE SHOWN TOLERANCES	MODEL NAME	
mm/in	.X ± 1.5/0.05 X. ± 2.0	IBCK551LR-v1.00	
DynaScan Technology Corp.			DATE 2024.11.19